LONG SEAMS	
COURSE	ORIENTATION
1	135°

Ship loose items:
NONE

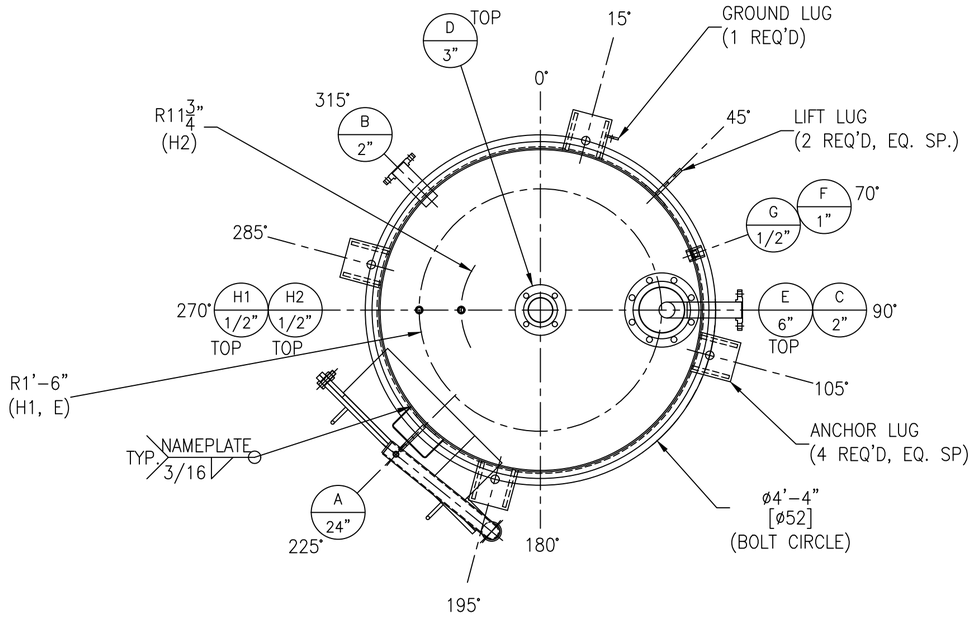

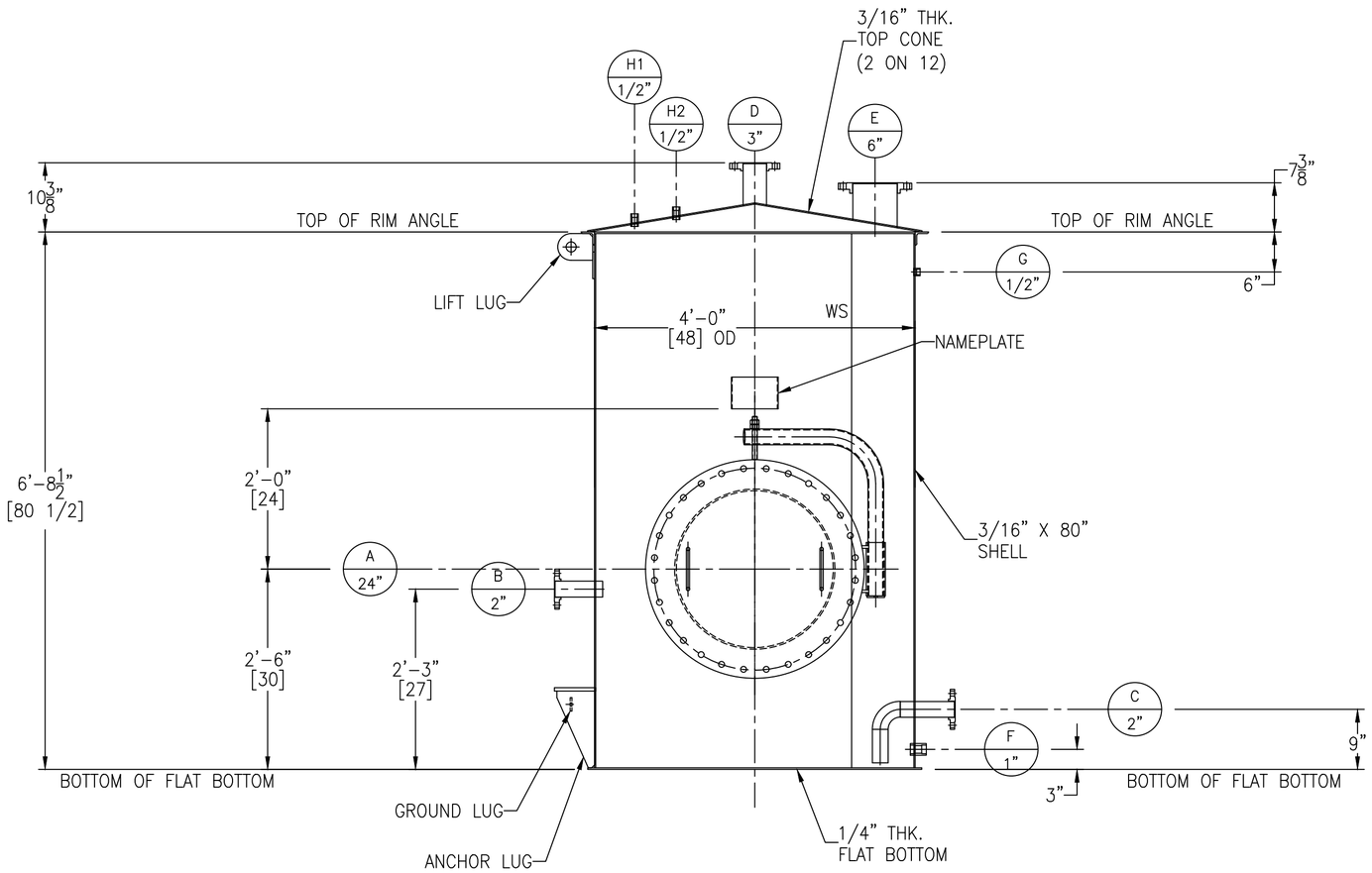

FC-38 GT-90

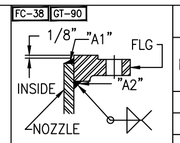

FIGURE NO. 1

FC-38 GT-90

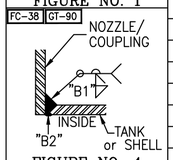

FIGURE NO. 4

FC-38 GT-90

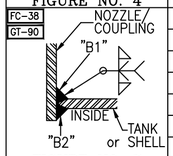

FIGURE NO. 7

FC-38 SA-37

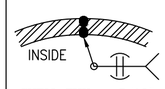

SHELL THK. < 5/16"

FIGURE NO. 9

NOZZLE SCHEDULE

MARK	SERVICE	SIZE	RATING	TYPE / STYLE	NECK SCHED.	PROJECTION EXT. (℄)	PROJECTION INT. (MIN.)	WELD FIGURE	REPAD SIZE (WIDTH X THK.)	WELD SIZE "A1"	"A2"	"B1"	"B2"	"C1"	"C2"
A	MANWAY	24"	–	API W/ DAVIT	1/4"	6"	1/2"	7	–	–	–	3/16	3/16	–	–
B	INLET	2"	150#	RFSO	80	6"	1"	1,7	–	3/16	3/16	1/4	1/4	–	–
C	OUTLET	2"	150#	RFSO W/ ELBOW	80	6"	SEE DWG	1,7	–	3/16	3/16	1/4	1/4	–	–
D	VENT	3"	150#	RFSO	40	SEE DWG	–	1,4	–	3/16	3/16	3/16	1/8	–	–
E	EMERGENCY VENT	6"	150#	RFSO	40	SEE DWG	–	1,4	–	1/4	1/4	3/16	1/8	–	–
F	LEVEL	1"	3000#	FULL THRD CPLG	–	–	1/2"	7	–	–	–	1/4	1/4	–	–
G	LEVEL SWITCH (HIGH)	1/2"	3000#	HALF THRD CPLG	–	–	–	4	–	–	–	1/4	1/8	–	–
H1	BLANKETING VALVE	1/2"	3000#	FULL THRD CPLG	–	–	1/4"	7	–	–	–	3/16	1/8	–	–
H2	BLANKETING VALVE	1/2"	3000#	FULL THRD CPLG	–	–	1/4"	7	–	–	–	3/16	1/8	–	–

MATERIALS OF CONSTRUCTION

	VESSEL
SHELL	SA36
TOP CONE/FLAT BOTTOM	SA36
RIM ANGLE	SA36
NOZZLE NECKS	SA106B-SMLS & SA234-WPS
NOZZLE FLANGES	SA105
MANWAY NECKS	SA36
MANWAY FLANGES	SA36
GASKETS	GARLOCK 3000
BOLTS/STUDS	SA193-B7 (ZINC PLATED)
NUTS	SA194-2H (ZINC PLATED)
REPADS	SA36
COUPLINGS	SA105
SUPPORTS/HOLD DOWNS	SA36
LIFTING LUGS	SA36
VACUUM RINGS	–
INSULATION RINGS	–
GROUND LUG	SA36
BAFFLE	–
LADDER	–
TANK CLIPS (LADDER)	–
HANDRAIL	–
HANDRAIL CLIPS	–
PLATFORM	–
PLATFORM CLIPS	–
DIPTUBE SUPPORT	–
JACKET SHELL	–
JACKET HEADS	–
JACKET NOZZLE NECKS	–
JACKET NOZZLE FLANGES	–

DESIGN DATA

	VESSEL
DESIGN AND FAB. CODE	API650
CERT. STAMP REQ'D.	NO
DESIGN PRESSURE	ATM
DESIGN TEMPERATURE	120° F
MIN. DESIGN METAL TEMP.	30° F @ ATM
OPERATING PRESSURE	ATM
OPERATING TEMPERATURE	AMBIENT
JOINT EFFICIENCY HEADS	0.70
JOINT EFFICIENCY SHELL	0.70
CORROSION ALLOWANCE	0"
SPECIFIC GRAVITY	1.0
EARTHQUAKE ZONE	Ss = (0.203) S1 = (0.087)
WIND LOAD	106 MPH
STRESS RELIEF	NOT REQ'D
RADIOGRAPHIC EXAM	NOT REQ'D
DYE PENETRANT EXAM	NOT REQ'D
MAGNETIC PARTICLE EXAM	NOT REQ'D
HYDROSTATIC TEST	–
PNEUMATIC TEST	2 PSIG / GAUGE #1
JKT HYDRO TEST	–
JKT DESIGN AND FAB. CODE	–
JKT CERT. STAMP REQ'D.	–
JKT DESIGN PRESSURE	–
JKT DESIGN TEMPERATURE	–
JKT MIN. DESIGN METAL TEMP.	–
JKT OPERATING PRESSURE	–
JKT OPERATING TEMPERATURE	–
JKT JOINT EFFICIENCY HEADS	–
JKT JOINT EFFICIENCY SHELL	–

VESSEL FINISH

INTERIOR WELD TREATMENT:	SAV TANK STANDARD
EXTERIOR WELD TREATMENT:	SAV TANK STANDARD
SAV TANK FINISHING STANDARD:	N/A
INSULATION:	N/A
PAINTING:	SEE NOTE 6

VESSEL CAPACITY AND WEIGHTS

OPERATING CAPACITY	–
FULL CAPACITY	600 GAL.
EMPTY SHIPPING WEIGHT	1,600 LBS.
WEIGHT FULL OF WATER	6,800 LBS.
WEIGHT FULL OF PRODUCT	6,800 LBS.

QUALITY CONTROL

ENG. _____ DATE: _____

Q.C. _____ DATE: _____

This drawing is issued for customer approval. please review, make approval changes (if any) in red. check the appropriate box, sign & date.

- ☐ Approval – no changes. Please proceed with fabrication.
- ☐ Approved as noted. Please proceed with fabrication
- ☐ Not approved. Please make changes and resubmit.

Customer signature _____ Date _____

GENERAL NOTES

1.) COVER ALL FLANGES, OPENINGS & MACHINED SURFACES PRIOR TO SHIPMENT UNLESS OTHERWISE NOTED.
2.) BOLT HOLES TO STRADDLE 0° & 180° UNLESS OTHERWISE NOTED.
3.) NOZZLE REPADS TO HAVE (1) ø1/4" TELL-TALE HOLES ON HORIZONTAL CENTER LINE.
ALL OTHER REPADS TO HAVE (1) ø1/4" WEEP HOLE AT LOWEST POINT ON PAD.
4.) MANUFACTURING TOLERANCE TO BE IN ACCORDANCE WITH API STANDARD 650 7.5.
5.) ASME MATERIALS TO CONFORM TO THE FOLLOWING: FLANGES – B16.5, FITTINGS – B16.9 & COUPLINGS – B16.11.
6.) PAINTING – SANDBLAST SP6. (1) COAT SHERWIN WILLIAMS MACROPOXY 646 △1 PORCELAIN WHITE (4–5 MILS) PAINT.

△1 REVISIONS

REV	D.BY	C.BY	DATE	DESCRIPTION
2				AS BUILT
1	RS	AD	8/16/24	CERTIFIED
0	RS	AD	7/25/24	APPROVAL

Savannah Tank & Equipment Corp.
1517 Telfair Road, Savannah, GA 31415
(912) 233-8902

DRAWN BY: RS
CHK'D BY: AD
APPROVED BY: NP
SCALE: 3/4" = 1'-0"

SHIMIZU NORTH AMERICA LLC
600 GALLON STORAGE TANK
EQUIP. #
CUST. PO #287622P004

DRAWING NO.: 042-24-1 SHT 1 OF 3 REV. SET 1